

Product model: HTM708 hygienic temperature transmitter

Manufacturer: Nanjing Hangjia Electronic Technology Co., Ltd.

Product category: temperature transmitter

Application: On-site temperature measurement and control of industrial processes such as food, pharmaceutical, environmental protection, machinery, chemical industry, etc.

Product Overview

HTM708 hygienic temperature transmitter adopts an all-stainless steel structure design and is mounted on a chuck. It is a hygienic temperature transmitter dedicated to the food, pharmaceutical and other industries. The product design complies with GMP, EHEDG and FDA standards. This product uses PT100 etc. as the signal measurement element, and the amplification circuit is located in the stainless-steel shell to convert the sensor signal into a (4~20) mA current signal or another standard signal. The entire product has undergone rigorous testing and aging of components, semi-finished products and finished products. With its excellent reliability, wide adaptability, product flexibility and diversity, this product is widely used in on-site temperature measurement and control of industrial processes such as food, pharmaceuticals, environmental protection, machinery, and chemicals.

Features

- Hygienic design, compliant with GMP, EHEDG and FDA standards
- All stainless steel 316L structure, no sanitary dead corners
- Standard chuck installation, easy to install and clean
- On-site display
- Isolated circuit design, strong anti-interference ability

Technical Parameters

Measuring Temperature Range	-40～300℃
Measuring Medium	various liquid, gas, or steam compatible with 304 or 316L stainless steel
Accuracy	±0.5%FS
Long-term Stability	±0.2%FS/year
Insertion Depth	customization
Installment Thread	customization
Operation Temperature	-40～85℃
Storage Temperature	-40～85℃
Supply Voltage	24VDC
Output Signal	2-wire 4～20mADC, RS485 or HART
Protection Grade	IP65
Electrical Connection	Cables, site display, Circular Connector, etc

Structure Drawings (Unit: mm)

Site display on top

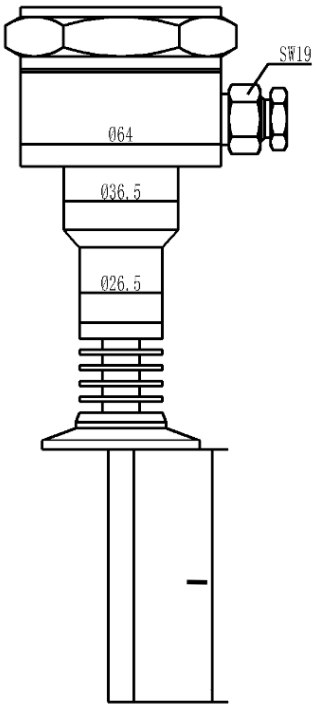

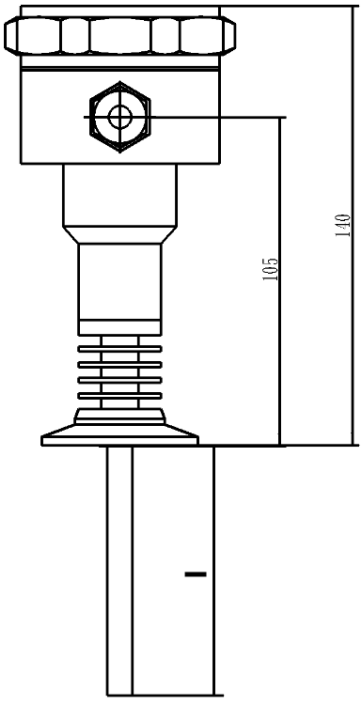

Site display by side

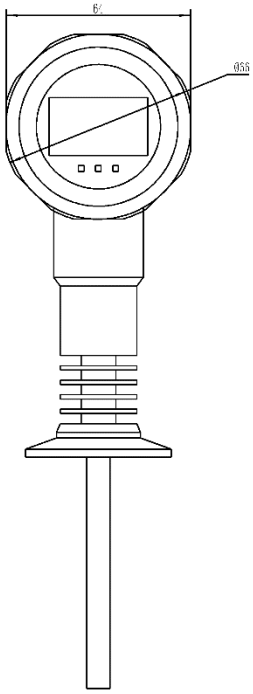

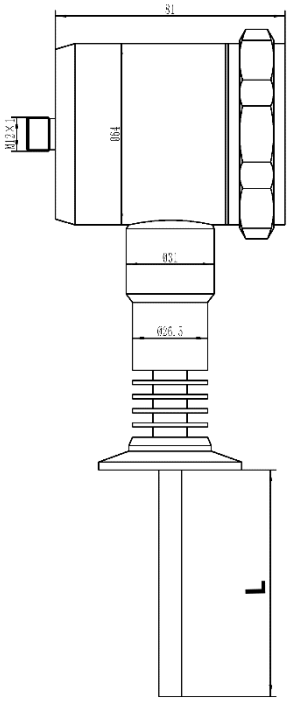

W/O site display
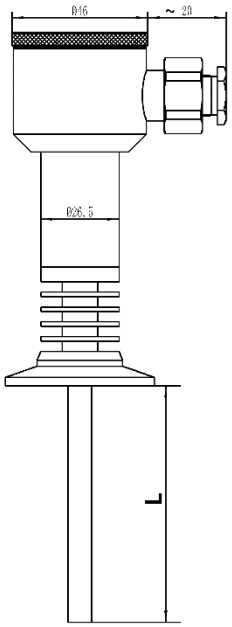

Electrical Connection

Terminal	M12×1	Cable outlet	2-wire 4~20mA output
+	1	Red	Power supply+ （+V）
-	2	Black	Power supply-（0V/+OUT）
others	3		

Process Connection

1.5” clamp	2” clamp
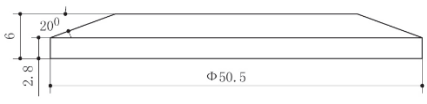	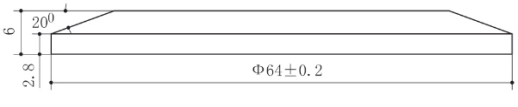

Ordering Guide

Model	Type						
HTM708	hygienic temperature transmitter						
	Range	Measuring Range					
	(0 ~ X) ℃	fill X directly					
		Code	Output singnal				
		B1	(4 ~ 20)mA				
		B7	RS485				
		B8	HART				
			Code	Process Connection			
			K1	1.5" clamp			
			K2	2" clamp			
				Code	Electronical Connection		
				C2	Cables		
				C5	M12×1		
					Code	Sensor type	
					P	PT100	
						Code	Others
						I	I=insertion depth(mm)
						L	L=Total length of protective tube(mm)
						ϕ	ϕ=Protection tube diameter(mm)
						Y1	Stainless steel waterproof case, without site display
						Y6	site display on top
						Y7	site display by side
						F	Other requests
HTM708	(0~200) ℃	B1	K1	C2	P	I=100 L=150 ϕ=8	

Certification Information

Factory certification	
Certification organization	CQM
Quality management system	ISO 9001:2015
Certification scope	Research, development and manufacture of pressure transmitter and temperature transmitter
Certificate No.	00223Q21711R1S